DTC	C0200/31	Front Speed Sensor RH Circuit
DTC	C0205/32	Front Speed Sensor LH Circuit
DTC	C1235/35	Foreign Object is Attached on Tip of Front Speed Sensor RH
DTC	C1236/36	Foreign Object is Attached on Tip of Front Speed Sensor LH
DTC	C1271/71	Low Output Signal of Front Speed Sensor RH (Test Mode DTC)
DTC	C1272/72	Low Output Signal of Front Speed Sensor LH (Test Mode DTC)
DTC	C1275/75	Abnormal Change in Output Signal of Front Speed Sensor RH (Test Mode DTC)
DTC	C1276/76	Abnormal Change in Output Signal of Front Speed Sensor LH (Test Mode DTC)

DESCRIPTION

The speed sensor detects wheel speed and transmits the appropriate signals to the skid control ECU. These signals are used for control of the ABS system. Each of the front and rear rotors has 48 serrations. When the rotors rotate, the magnetic field generated by the permanent magnet in the speed sensor induces AC voltage. Since the frequency of this AC voltage changes in direct proportion to the speed of the rotor, the frequency is used by the skid control ECU to detect the speed of each wheel.
DTCs C1271/71, C1272/72, C1275/75 and C1276/76 are output only in test mode (SIGNAL CHECK).

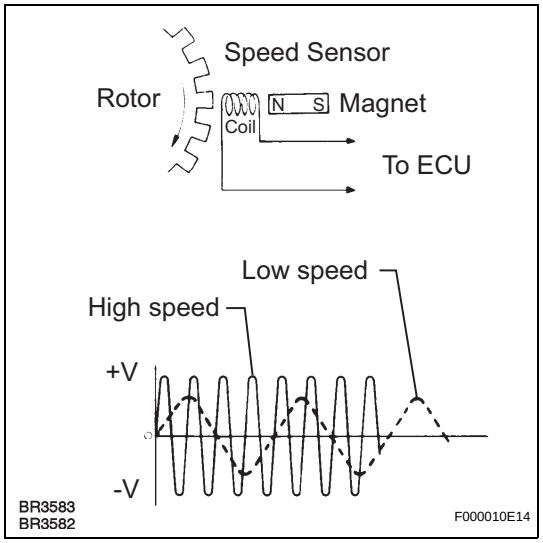

BC

DTC No.	DTC Detecting Condition	Trouble Area
C0200/31 C0205/32	When any of the following (a to c) is detected: (a) All the following conditions continue for at least 1 second. * Vehicle speed is more than 6 mph (10 km/h). * Open or short in vehicle speed sensor signal circuit. (b) Momentary interruption of the sensor signal of faulty wheel has occurred 7 times or more. (c) The condition that the speed sensor signal circuit is open continues for 0.5 sec. or more.	• Right front and left front speed sensor • Each speed sensor circuit • Sensor rotor • Sensor installation
C1235/35 C1236/36	All the following conditions continue for at least 5 seconds. – Vehicle speed is more than 12 mph (20 km/h). – Vehicle speed sensor signal receives interference.	• Right front and left front speed sensor • Each speed sensor circuit • Sensor installation

HINT:
- DTC C0200/31 and C1235/35 are for the right front speed sensor.
- DTC C0205/32 and C1236/36 are for the left front speed sensor.

WIRING DIAGRAM

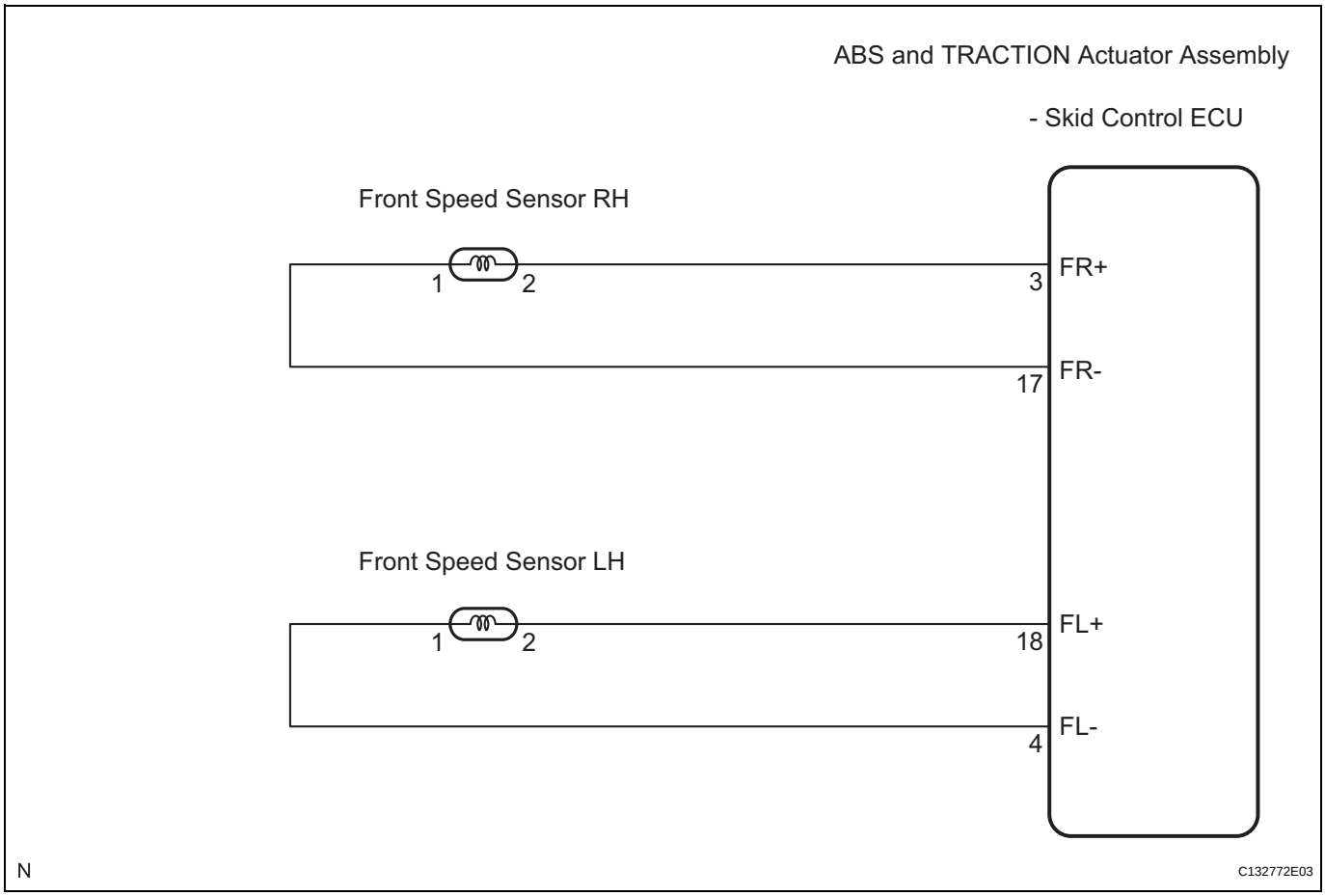

INSPECTION PROCEDURE

NOTICE:

When replacing the ABS and TRACTION actuator assembly, perform zero point calibration (See page BC-80).

1 READ VALUE OF INTELLIGENT TESTER (FRONT SPEED SENSOR)

(a) Connect the intelligent tester to the DLC3.
(b) Start the engine.
(c) Select the DATA LIST mode on the intelligent tester.

Item	Measurement Item / Range (Display)	Normal Condition
WHEEL SPD FR	Wheel speed sensor (FR) reading / min.: 0 km/h (0 MPH), max.: 326 km/h (202 MPH)	Actual wheel speed
WHEEL SPD FL	Wheel speed sensor (FL) reading / min.: 0 km/h (0 MPH), max.: 326 km/h (202 MPH)	Actual wheel speed

(d) Check that there is no difference between the speed value output from the speed sensor displayed on the intelligent tester and the speed value displayed on the speedometer when driving the vehicle.
OK:
There is almost no difference from the displayed speed value.
HINT:
There is tolerance of +-10% in the speedometer indication.

NG → **Go to step 3**

OK

2 INSPECT SPEED SENSOR AND SENSOR ROTOR SERRATIONS

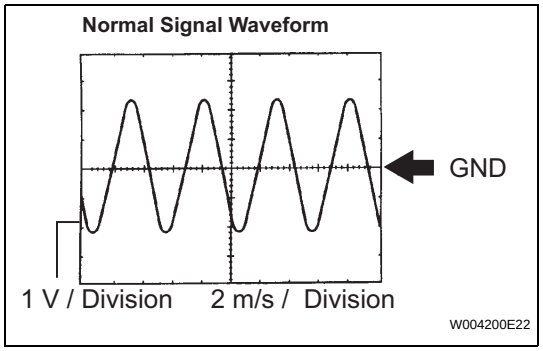

(a) INSPECTION USING OSCILLOSCOPE
(1) Connect the oscilloscope to terminals FR+ - FR- or FL+ - FL- of the skid control ECU.
(2) Drive the vehicle at about 19 mph (30 km/h), and check the signal waveform.
OK:
A waveform as shown in the figure should be output.
HINT:
- As vehicle speed (wheel revolution speed) increases, a cycle of the waveform narrows and the fluctuation in the output voltage becomes greater.
- When noise is identified in the waveform on the oscilloscope, error signals are generated due to the speed sensor rotor's scratches, looseness or foreign matter attached to it.

NG → **Go to step 3**

OK

REPLACE ABS AND TRACTION ACTUATOR ASSEMBLY

BC

3 INSPECT FRONT SPEED SENSOR

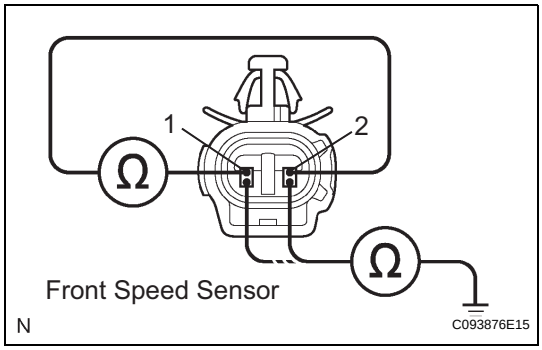

(a) Make sure that there is no looseness at the locking part and connecting part of connectors.

(b) Disconnect the speed sensor connectors.

(c) Measure the resistance according to the value(s) in the table below.

Standard resistance:

LH

Tester Connection	Specified Condition
A2-2 (FL+) - A2-1 (FL-)	0.92 to 1.22 kΩ at 20°C

RH

Tester Connection	Specified Condition
A3-2 (FR+) - A3-1 (FR-)	0.92 to 1.22 kΩ at 20°C

(d) Measure the resistance according to the value(s) in the table below.

Standard resistance:

LH

Tester Connection	Specified Condition
A2-2 (FL+) - Body ground	10 kΩ or higher
A2-1 (FL-) - Body ground	10 kΩ or higher

RH

Tester Connection	Specified Condition
A3-2 (FR+) - Body ground	10 kΩ or higher
A3-1 (FR-) - Body ground	10 kΩ or higher

NOTICE:

Check the speed sensor signal after replacement (See page BC-83).

NG → **REPLACE FRONT SPEED SENSOR**

OK

4 CHECK HARNESS AND CONNECTOR (FRONT SPEED SENSOR - SKID CONTROL ECU)

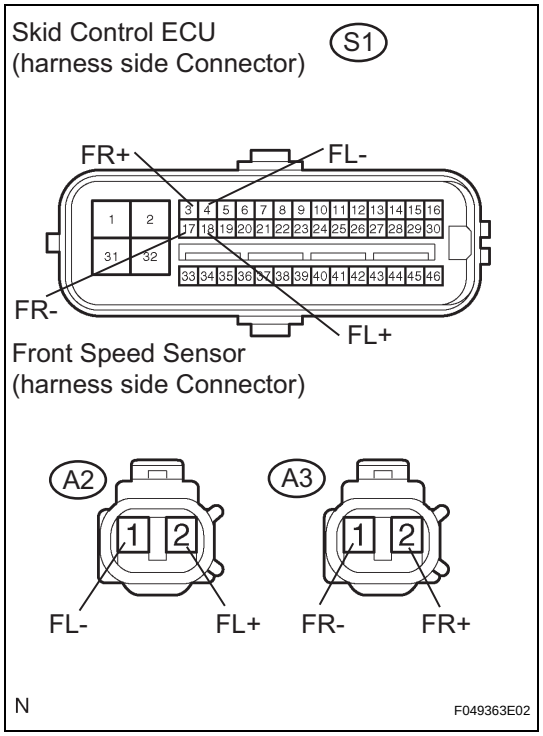

(a) Disconnect the skid control ECU connector and the front speed sensor connectors.

(b) Measure the resistance according to the value(s) in the table below.

Standard resistance:

LH

Tester Connection	Specified Condition
S1-18 (FL+) - A2-2 (FL+)	Below 1 Ω
S1-4 (FL-) - A2-1 (FL-)	Below 1 Ω

RH

Tester Connection	Specified Condition
S1-3 (FR+) - A3-2 (FR+)	Below 1 Ω
S1-17 (FR-) - A3-1 (FR-)	Below 1 Ω

(c) Measure the resistance according to the value(s) in the table below.

Standard resistance:

LH

Tester Connection	Specified Condition
S1-18 (FL+) - Body ground	10 kΩ or higher
S1-4 (FL-) - Body ground	10 kΩ or higher

RH

Tester Connection	Specified Condition
S1-3 (FR+) - Body ground	10 kΩ or higher
S1-17 (FR-) - Body ground	10 kΩ or higher

NG → **REPAIR OR REPLACE HARNESS OR CONNECTOR**

OK

5 INSPECT SPEED SENSOR AND SENSOR ROTOR SERRATIONS

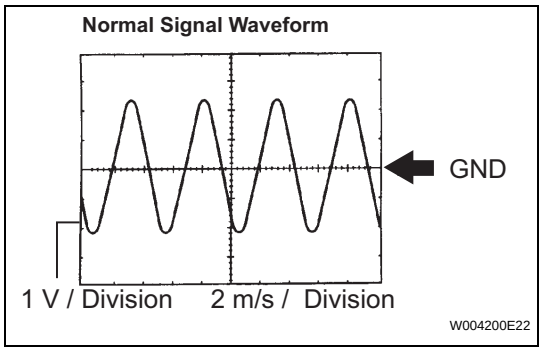

(a) INSPECTION USING OSCILLOSCOPE

(1) Connect the oscilloscope to terminals FR+ - FR- or FL+ - FL- of the skid control ECU.

(2) Drive the vehicle at about 19 mph (30 km/h), and check the signal waveform.

OK:

A waveform as shown in the figure should be output.

HINT:

- As vehicle speed (Wheel revolution speed) increases, a cycle of the waveform narrows and the fluctuation in the output voltage becomes greater.

BC

- When noise is identified in the waveform on the oscilloscope, error signals are generated due to the speed sensor rotor's scratches, looseness or foreign matter attached to it.

NG → **Go to step 6**

OK

REPLACE ABS AND TRACTION ACTUATOR ASSEMBLY

6 INSPECT FRONT SPEED SENSOR INSTALLATION

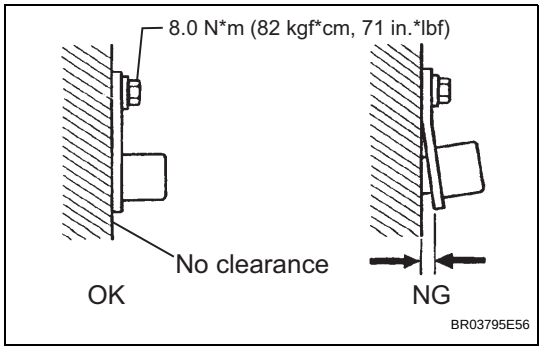

(a) Check the speed sensor installation.
OK:
The installation bolt is tightened properly.
There is no clearance between the sensor and the front steering knuckle.
NOTICE:
Check the speed sensor signal after replacement (See page BC-83).
Torque: 8.0 N*m (82 kgf*cm, 71 in.*lbf)

NG → **REPLACE FRONT SPEED SENSOR**

OK

7 INSPECT FRONT SPEED SENSOR TIP

(a) Remove the front speed sensor (See page BC-211).
(b) Check the sensor tip.
OK:
No scratches or foreign matter on the sensor tip.
NOTICE:
Check the speed sensor signal after cleaning / replacement (See page BC-83).

NG → **CLEAN OR REPLACE FRONT SPEED SENSOR**

OK

8	**INSPECT SPEED SENSOR ROTOR**

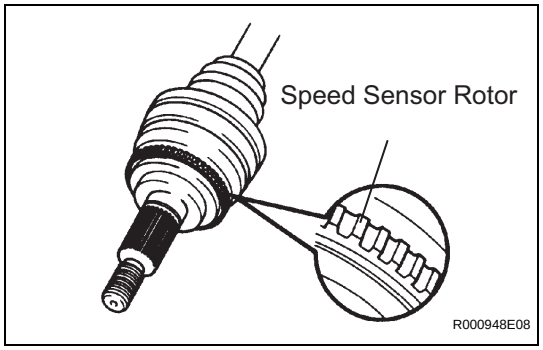

(a) Remove the drive shaft assembly.

(b) Check the sensor rotor serrations.

OK:

No scratches, missing teeth or foreign matter on the rotors.

HINT:

If there is foreign matter in the rotor, remove it and check the output waveform after reassembly.

NOTICE:

Check the speed sensor signal after cleaning / replacement (See page BC-83).

NG → **REPLACE OUTBOARD JOINT SHAFT ASSEMBLY (SPEED SENSOR ROTOR)**

OK

REPLACE ABS AND TRACTION ACTUATOR ASSEMBLY